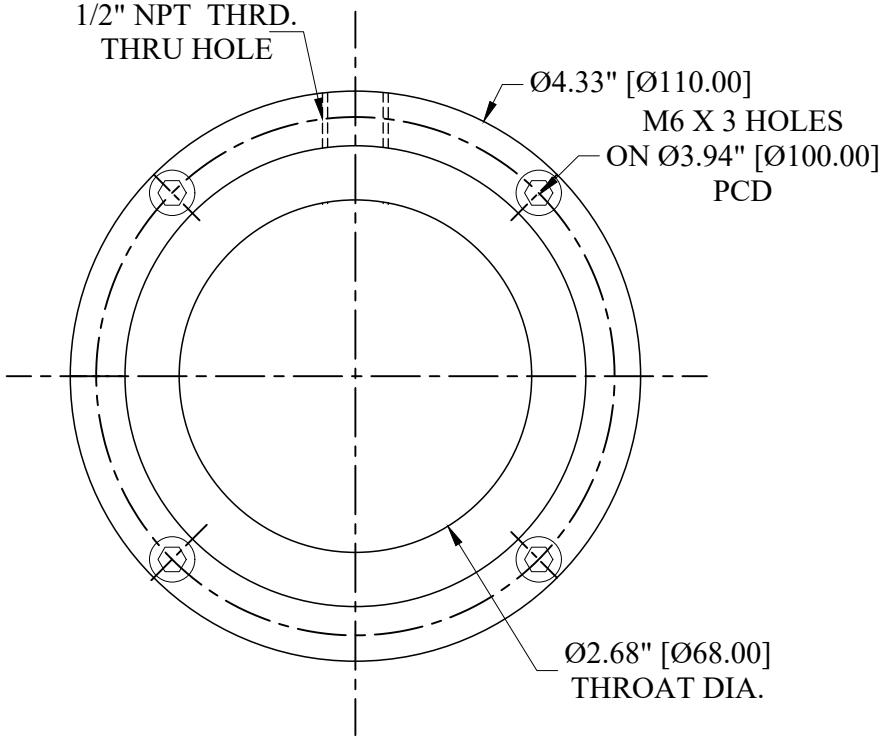

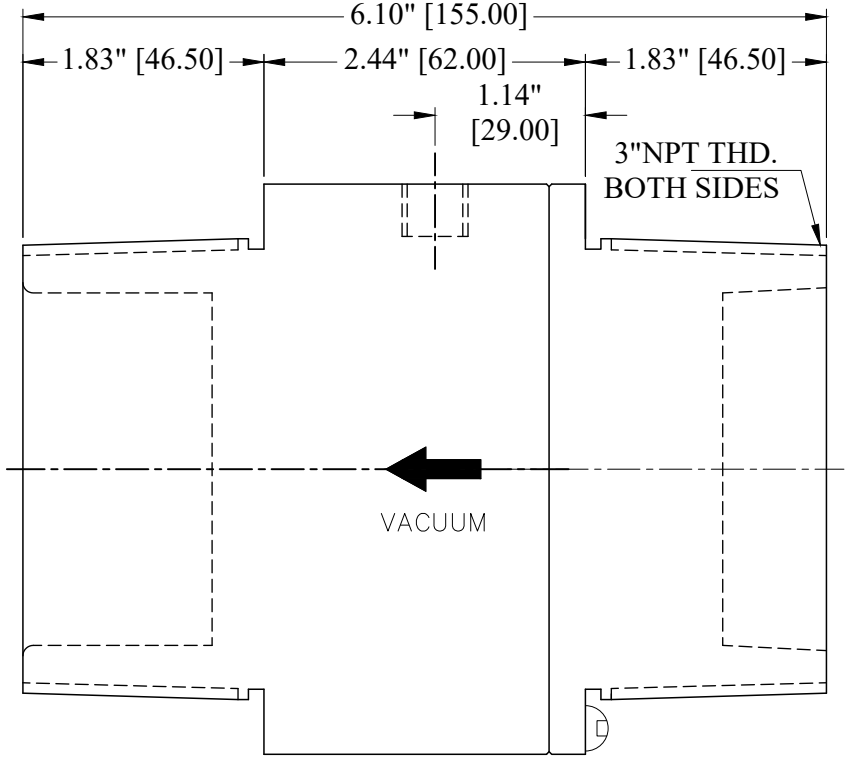

PROPRIETARY

REPRODUCTION OR DISTRIBUTION WITHOUT WRITTEN CONSENT OF NEXFLOW™ IS PROHIBITED.

THIRD ANGLE PROJECTION

MATERIAL: STAINLESS STEEL

FINISH: BUFFING

NEXT ASSEMBLY	USED ON	QTY PER ASSY	PART NO
–	–	–	–
–	–	–	–
–	–	–	–
–	–	–	–
–	–	–	–
–	–	–	–

PART NO –

REQUIREMENTS–UNLESS OTHERWISE SPECIFIED

GENERAL

1. DIMS ARE IN INCHES (MM)
2. DIMENSIONING AND TOLERANCING IN ACCORDANCE WITH ANSI Y14.5 (1982)
3. MACHINE FINISH 125 MICRO INCH RMS
4. INTERNAL RADII .015
5. BREAK SHARP CORNERS .005 TO .015

LIMITS

1. LINEAR DIMS.
   .XXX = .005
   .XX = .010
   .X = .030
2. ANGLES = ± 1/2°
3. RUNOUT .010 TIR
4. HOLES IN ACCORDANCE WITH AND 10387

CONTRACT NUMBER –
CLIENT –
CONTRACTOR –

DRAWN	CHIRAG.S	DATE	25/04/2021
DESIGN	LES	CHECKED	LES
PROJECT	–	Q.A.	–
STRESS	–	MANUFACTURING	–
THERMAL	–	MATERIALS	–
MECHANISM	–	ELECTRICAL	–

NEX FLOW AIR PRODUCTS CORP.
10520 YONGE STREET, UNIT 35B-220, RICHMOND HILL, ON L4C 3C7
TEL.: (416) 410-1313 & FAX: (416) 410-1806 www.nex-flow.com

TITLE: 3" THREADED STAINLESS STEEL RING VAC

SIZE	CAGE CODE	DWG NO	RELEASE	REV
C	–	30006TS	P	–

SCALE 1:1 | CAD NO | SHEET 1 OF 1