NOTES:

1 ALL DIMENSIONS SHOWN ARE FINISH OPERATIONAL DIMENSIONS WHICH INCLUDE RESIDUAL COATINGS UNLESS OTHERWISE SPECIFIED.

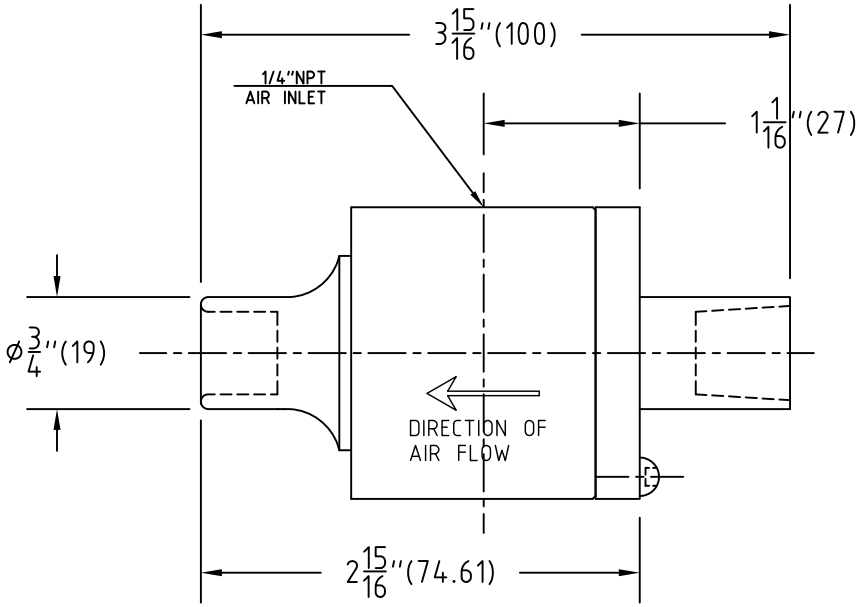

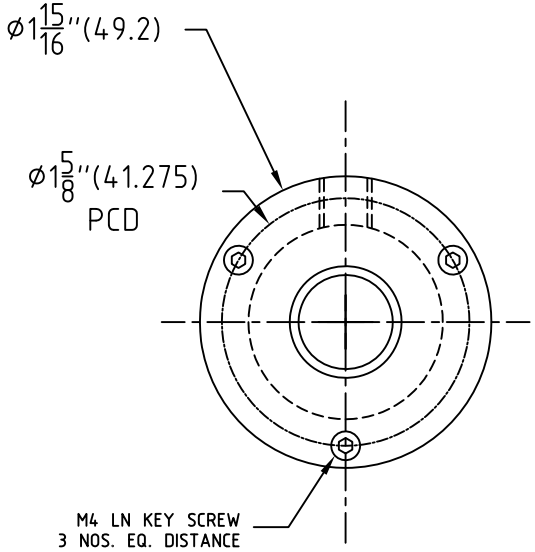

THIRD ANGLE PROJECTION

MATERIAL
ALUMINUM 6061 T6
–
–

FINISH
–
–
–

NEXT ASSEMBLY	USED ON	QTY PER ASSY	PART NO
–	–	–	–
–	–	–	–
–	–	–	–
–	–	–	–
–	–	–	–
–	–	–	–
–	–	–	–

PART NO

REQUIREMENTS–UNLESS OTHERWISE SPECIFIED

GENERAL

1. DIMS ARE IN INCHES(MM)
2. DIMENSIONING AND TOLERANCING IN ACCORDANCE WITH ANSI Y14.5 (1982)
3. MACHINE FINISH 125 MICRO INCH RMS
4. INTERNAL RADII .015
5. BREAK SHARP CORNERS .005 TO .015

LIMITS

1. LINEAR DIMS.
   .XXX = .005
   .XX = .010
   .X = .030
2. ANGLES = ± 1/2°
3. RUNOUT .010 TIR
4. HOLES IN ACCORDANCE WITH AND 10387

CONTRACT NUMBER –
CLIENT –
CONTRACTOR –

DRAWN VRG	DATE 08–04–11
DESIGN LES	CHECKED –
PROJECT –	Q.A. –
STRESS –	MANUFACTURING –
THERMAL –	MATERIALS –
MECHANISM	ELECTRICAL

NEX FLOW AIR PRODUCTS CORP.
10520 YONGE STREET, UNIT 35B–220, RICHMOND HILL, ON L4C 3C7
TEL.: (416) 410–1313 & FAX: (416) 410–1806 www.nex–flow.com

TITLE
OUTLINE DRAWING OF
0.75" ALUMINUM RING VAC

SIZE	CAGE CODE	DWG NO	RELEASE	REV
C	–	30000	P	1

SCALE 2:1 | CAD NO 0.75"–ALRV | SHEET 1 OF 1