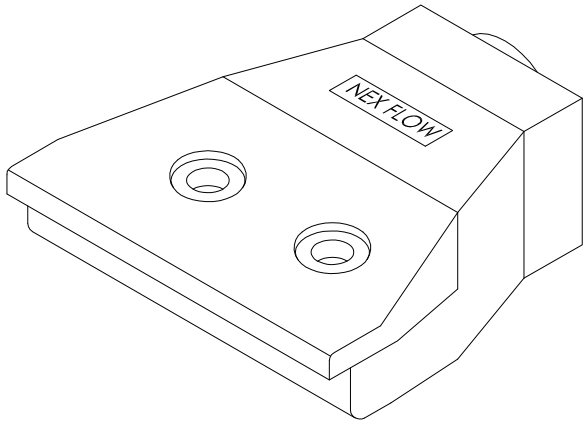

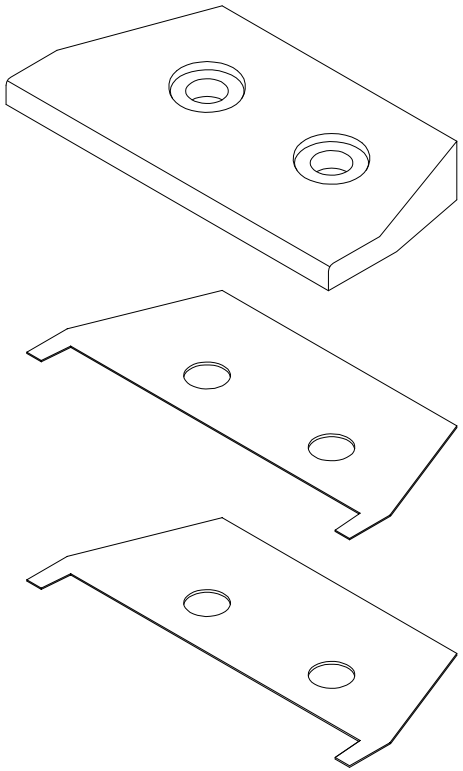

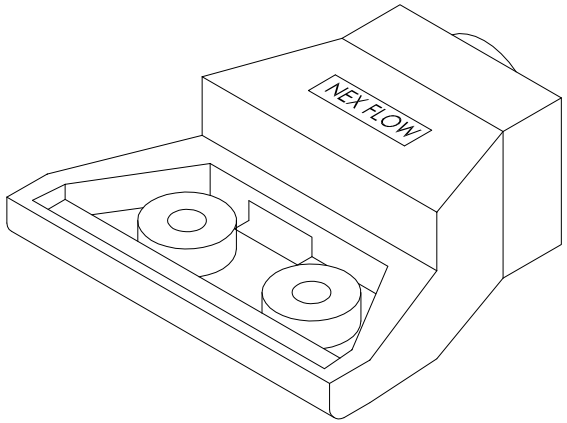

THIRD ANGLE PROJECTION

MATERIAL: SEE TABLE - -

FINISH: SEE TABLE - -

NEXT ASSEMBLY	USED ON	QTY PER ASSY	PART NO
-	-	-	-
-	-	-	-
-	-	-	-
-	-	-	-
-	-	-	-
-	-	-	-
-	-	-	-
-	-	-	-
PART NO	SEE TABLE		—

REQUIREMENTS UNLESS OTHERWISE SPECIFIED

GENERAL:

1. DIMS ARE IN INCHES
2. DIMENSIONING AND TOLERANCING IN ACCORDANCE WITH ASME Y14.5 (1992)
3. MACHINE FINISH 125 MICRO INCH RMS
4. INTERNAL RADII .015
5. BREAK SHARP CORNERS .005 TO .015

LIMITS

1. LINEAR DIMS
   .XXX ± .005
   .XX ± .010
   .X ± .030
2. ANGLES ± 1/2°
3. RUNOUT .010 TIR
4. HOUSIN ACCORDANCE WITH AND 10387

CONTRACT NUMBER -
CLIENT -
CONTRACTOR -

DRAWN LES	DATE 31-08-12
DESIGN LES	CHECKED —
PROJECT —	Q.A. —
STRESS —	MANUFACTURING —
THERMAL —	MATERIALS —
MECHANISM —	ELECTRICAL —

NEX FLOW AIR PRODUCTS CORP.
10520 YONGE STREET, UNIT 35B-220, RICHMOND HILL, ON L4C 3C7
TEL.: (416) 410-1313 & FAX: (416) 410-1806 www.nex-flow.com

TITLE: FLAT JET ASSEMBLY

SIZE	CAGE CODE	DWG NO	RELEASE	REV
D	—	XXXXXX	P	2

SCALE 1:1 | CAD NO 90024SH-2 | SHEET 1 OF 1