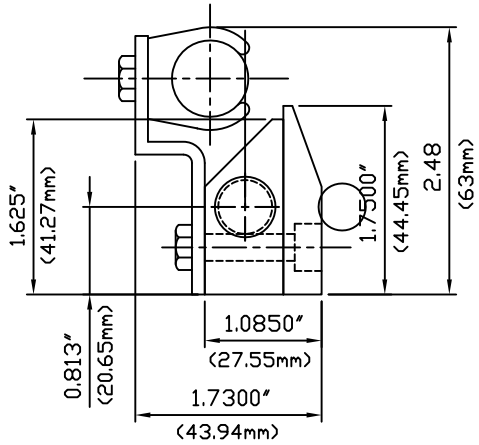

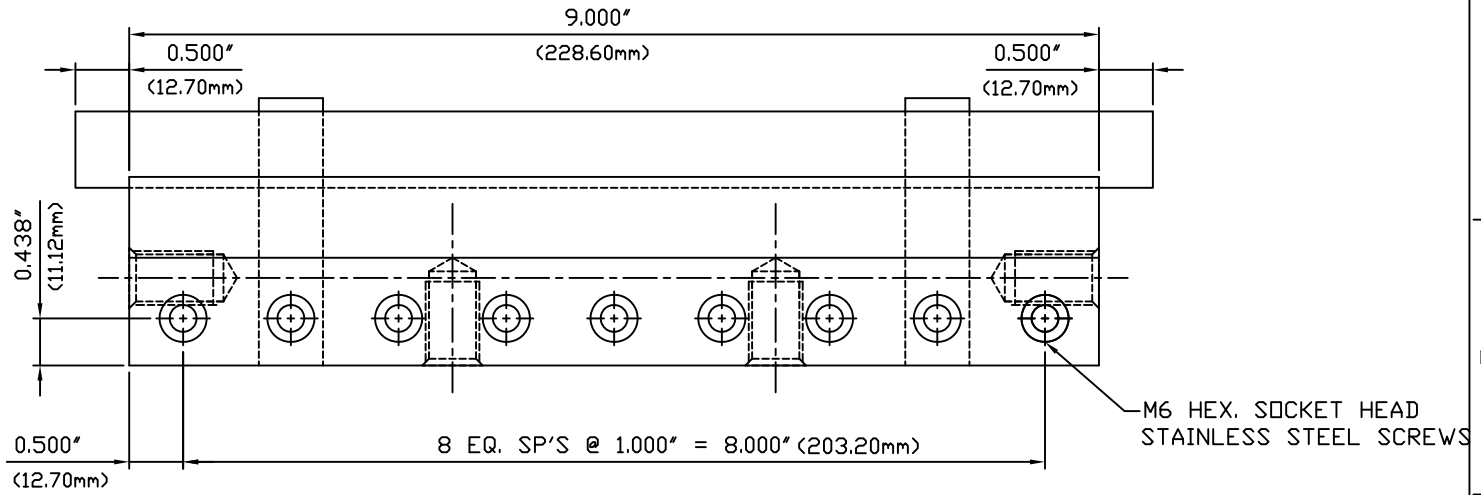

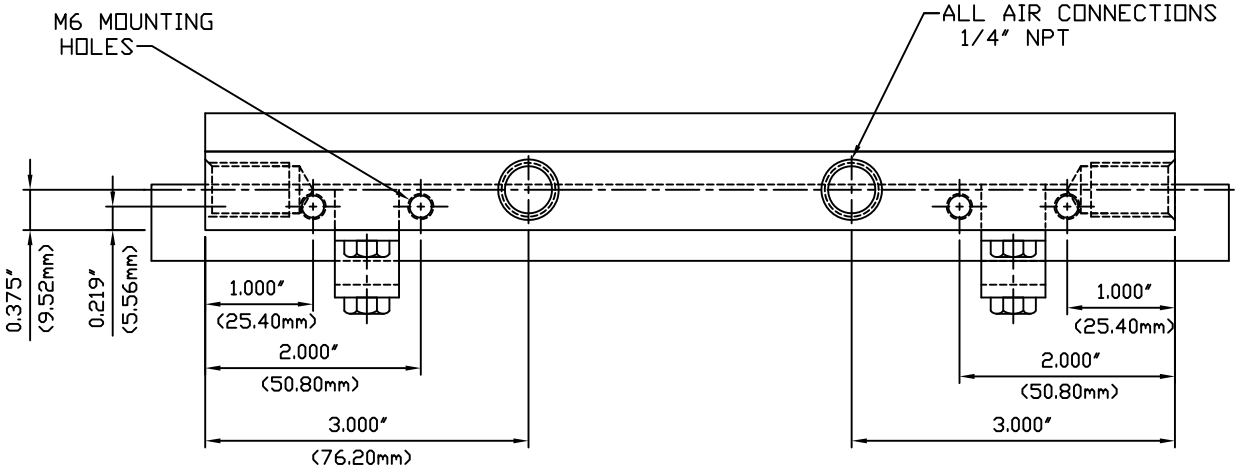

NOTE: ALL DIMENSIONS ARE IN INCHES AND DIMENSIONS IN '()' ARE IN mm.

DRAWN NAG	DATE 14 NOV. 2010
DESIGN LES	CHECKED –
MATERIAL ALUMINIUM	

THIRD ANGLE PROJECTION

NEX FLOW AIR PRODUCTS CORP.
10520 YONGE STREET, UNIT 35B-220, RICHMOND HILL, ON L4C 3C7
TEL.: (416) 410-1313 & FAX: (416) 410-1806 www.nex-flow.com

TITLE
DIMENSIONAL DRAWING OF
9" X-STREAM AIR BLADE AIR KNIFE
WITH IONIZER

SIZE	CAGE CODE	DWG NO	RELEASE	REV
–	–	XAKI-9	–	–

SCALE	CAD NO	SHEET
1:1	–	1 OF 1